AZHT-R6P-CB-9845

98×45mm Impinj® Monza® R6-P Roll-format RFID Hang Tag



Key Features

Operating Frequency
UHF 860-960 MHz

Chip Type
Impinj® Monza® R6-P

Communication Protocol
ISO/IEC 18000-6C, EPC Global Gen2v2

User Memory
32 bits

EPC Memory
128 bits

Password Memory
Access-32 Bits/Kill-32 Bits

Certificate
WEEE compliant

1. Product Overview

The Impinj® Monza® R6-P Roll-format RFID Hang Tag is specifically designed for the apparel industry. This hangtag seamlessly integrates into clothing hangtags, ensuring accurate tracking and inventory management.It effectively safeguards merchandise against theft and counterfeiting,while maintaining stability and performance advantages. The Impinj® Monza® R6-P RFID Hang Tag enhances operational efficiency for clothing brands and protects brand integrity.

2. Product Parameters

2.1 Physical Characteristics

SKU	AZHT-R6P-CB-9845
Antenna Size	40×15 mm
Hang Tag Size	98×45 mm
Base Material	Coated Paper
Antenna	Etched Aluminum(10 μm)

2.2 Technical Parameters

Operating Frequency	860-960 MHz
Communication Protocol	ISO/IEC 18000-6C, EPC Global Gen2v2
Operating Mode	Passive
Write Sensitivity	-17 dBm
Reading Sensitivity	-22 dBm

2.3 Chip Characteristics

Chip Manufacturer	Impinj®
Chip Type	Monza® R6-P
Write Endurance	100,000 times
Data Storage	>10 years
EPC Memory	96-128 bits
User Memory	64-32 bits
TID Memory	96 bits
Password Memory	Access/Kill shared
Tag Data Protection Features	Access/Kill Short-range mode
ESD Voltage Immunity	Max. 2000V

2.4 Additional Information

Operating Environment	-20°C~+50°C, 20%~80% RH
Storage Environment	+18°C~+28°C, 40%~60% RH
Shelf Life	1year at 23 ± 5°C/50% ± 10%RH), sealed in the vacuum bag and avoid direct sunlight exposure.
Handling Precautions	1. Keep away from water and collision. 2. DO NOT BEND.

2.5 Packaging

Packing Format	Packed in roll
Core ID	3 inch(76.2 ± 0.50 mm)
Packing Quantity	Min. 500 pcs/roll

3. Label Dimensions

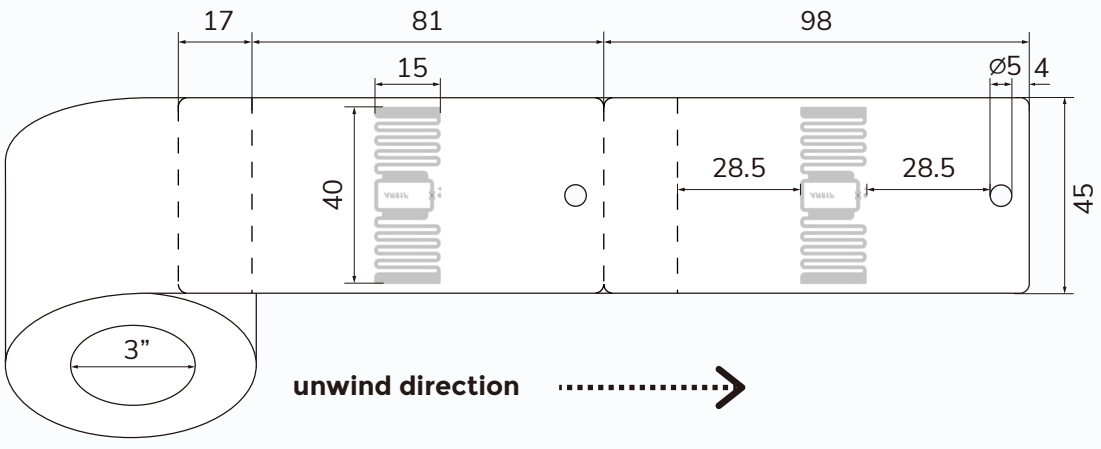



https://rfidlabel.com
sales@rfidlabel.com
Singapore Office: 51 Goldhill Plaza #07-07 Singapore 308900
Shenzhen Office: 33-408, Qianhai SZ-HK Fund Town, Nanshan, Shenzhen, China 518052
Shenzhen Factory: Q5, XingDao Industrial Park, LongGang, Bantian, Shenzhen, China 518129